E6 Hålogaland bridge

Statens vegvesen

HÅLOGALAND BRIDGE

Statens vegvesen

E6 Hålogaland bridge

Existing an new road

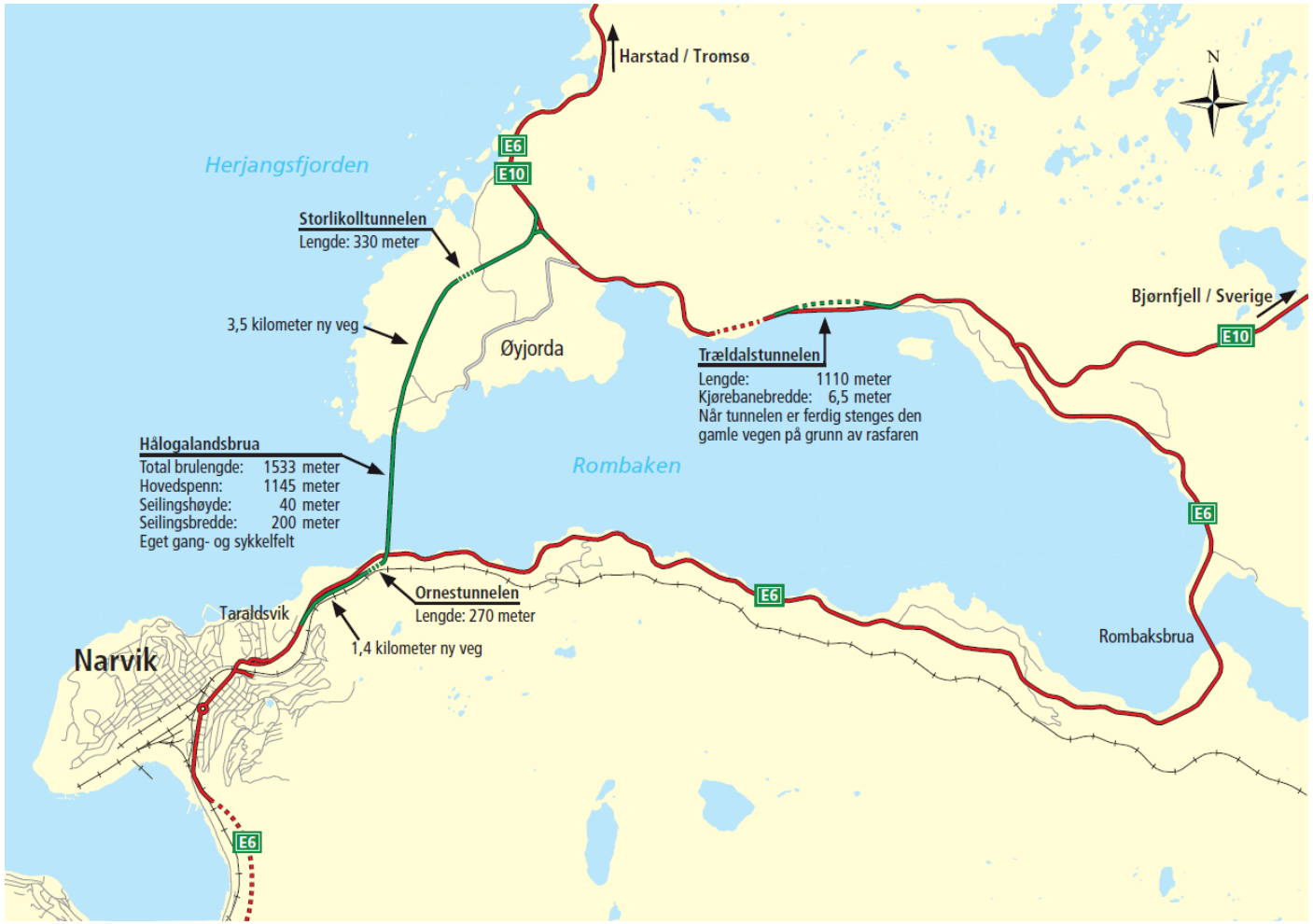

Statens vegvesen

Road and bridge, length

Tekniske data:

- Ornes – Stormyra: Total length: 6,4 km
- Hålogaland bridge:
  - Total length: 1 533 m
  - Min span: 1 145 m
  - Viaducts: Karistrand 250 m, Øyjord 148 m
  - Main cables: 2 pcs, diameter 47 cm, length 1 700 m
- Road and tunnel Ornes – Karistrand: 1 400 m
- Local bridge Øyjord: 135 m
- Length Øyjord – Stormyra: ca. 3,5 km
- 3 vegkryss og tilhørende vegarmer
- Trældal tunnel: Totalt length 1500 m, tunnel 1110 m

Statens vegvesen

E6 Hålogaland bridge

- Consultant Hålogaland bridge: Cowi AS
- Consultant Øyjord bridge: Rambøll AS
- Consultant roads: Norconsult AS
- Contractor road and tunnel: Istak
  - Contract: 375 mill. NOK eks vat.
- Contractor Concrete works: NCC Construction
  - Contract: 651 mill. NOK eks vat.
- Contractor steelworks: JV SRBG & VNG doo
  - (SRBG: Sichuan Road & Bridge Group)
  - Contract: 754 mill. NOK eks vat.
- Contractor electical eng.: Aventi: 29 mill. NOK eks. vat

E6 Hålogaland bridge

- Concrete works, NCC Norge:

  - Tårn Karistrand: Ferdig støpt, glidestøp tårnbein.
  - Forankring, spredekammer og forankringskammer.
  - Viadukt Karistrand med kantdragere.
  - Tårn Øyjord, glidestøp tårnbein.
  - Viadukt Øyjord, med kantdragere.
  - Spennkabler gjennom fjell ferdig innstøpt og gyst.
  - Øyjord bru 135 m.

Statens vegvesen

E6 Hålogaland bridge

- Road- and tunnelworks, Istak:

  Øyjord, 3,5 km road:
  - Connecting to existing E6 by roundabout at Stormyra
  - Storlikollen tunnel: ca. 320 m.
  - Road complete to the bridge
- Ornes, 1,4 km veg:
  - Roundabout connecting new and old road
  - Ornestunnelen: 270 m

  - Delivered 12.10.2016

Statens vegvesen

E6 Hålogaland bridge

- Steelworks, JV Hålogalandsbrua (JVH):
  - Catwalk built from land to land across the fjord.
  - Strands for main cables on site at Øyjord.
  - Tower- og splay-saddles are in posision.
  - Box girder, (bridge deck) under production in Zongshan, finished welding, surface painting ongoing.
  - Hanger clamps under production in Vietnam
  - Hangers: Under production in Switzerland

Statens vegvesen

E6 Hålogaland bridge

- Elektrical engineering, Aventi AS:
  - Includes all such works for road and bridge.
  - Ligths for roads
  - Dehumidification of main cables and box girder.
  - Progress according to steelworks.

E6 Hålogaland bridge

Øyjord bridge

Statens vegvesen

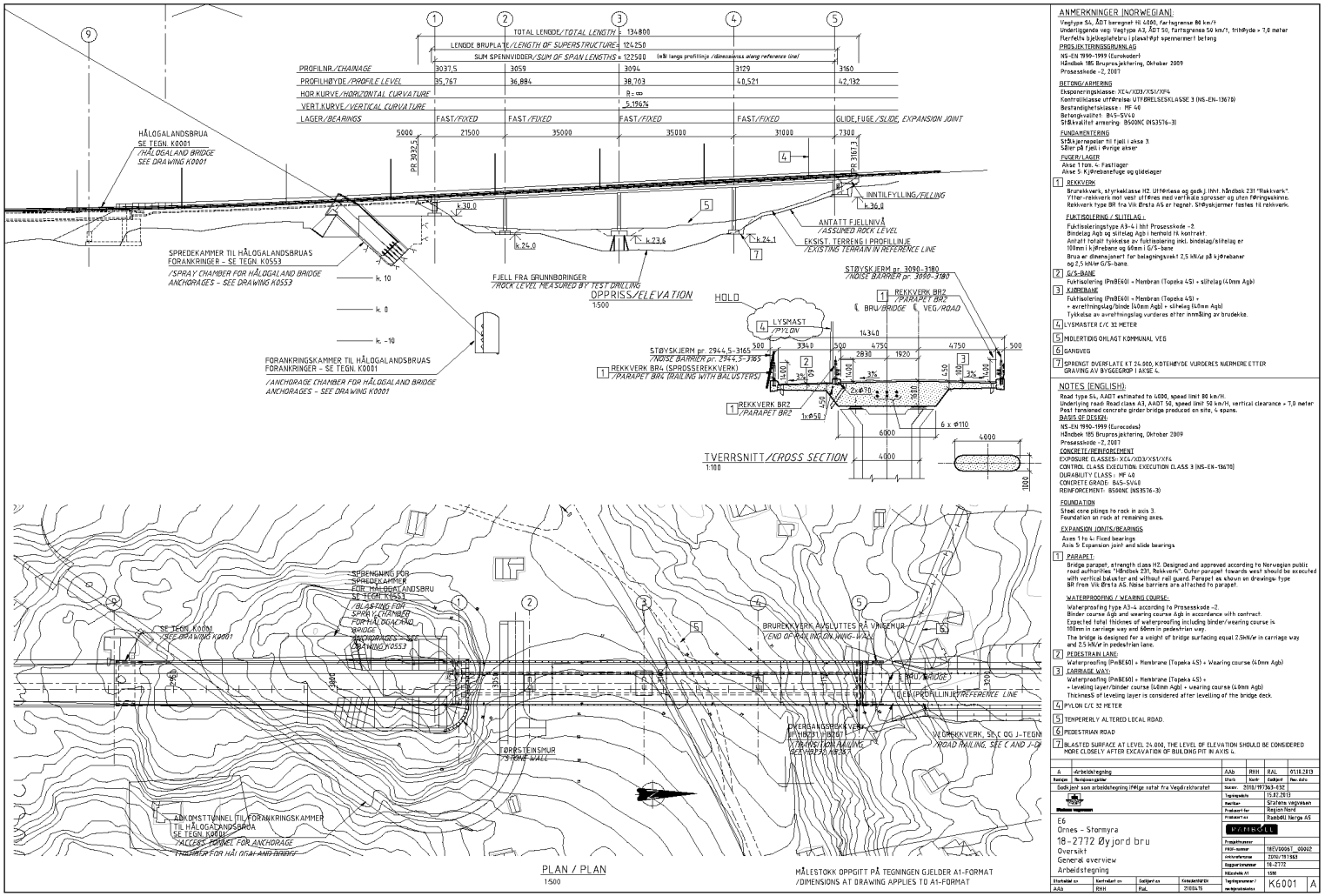

Statens vegvesen

E6 Hålogaland bridge

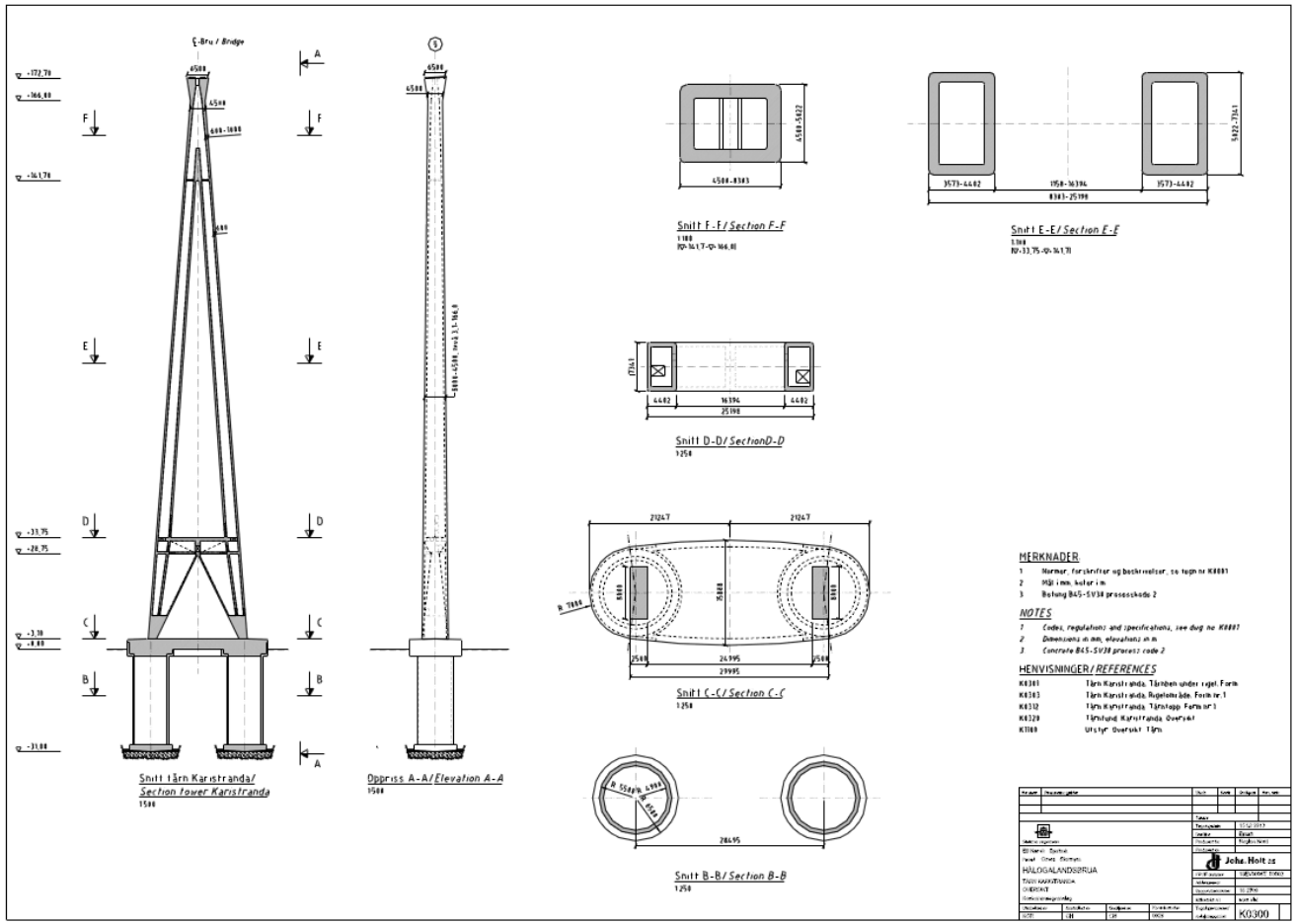

Tårn Karistanda

Bunn senkekasse kote –31,0
Topp betong i tårn +172,7
Topp tårnhus +179,1
Total høyde tårn 210 m

Tårn Øyjord

Bunn senkekasse kote –22,0
Topp betong i tårn +167,1
Topp tårnhus +173,5
Total høyde tårn 195,5 m

Statens vegvesen

E6 Hålogaland bridge

Suspension bridge

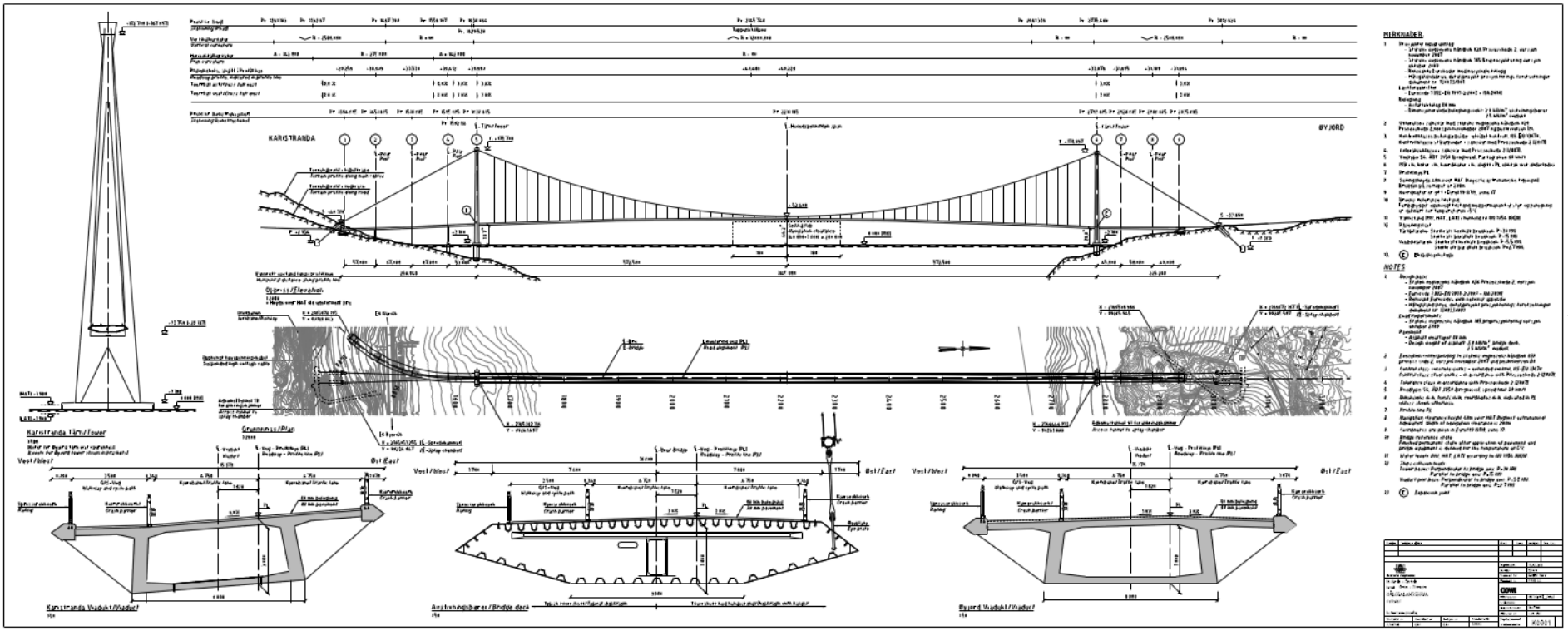

Total length: 1533 m

Length of main span: 1145 m

Diameter main cabel: 0,48 m

Navigation clearance: 40 m

Number 1 i Norway: Hardanger bridge 1310 m main span

Longest suspension bridge span: Akashi Kaikyo: 1991 m

Statens vegvesen

E6 Hålogaland bridge, anchoring to rock ground

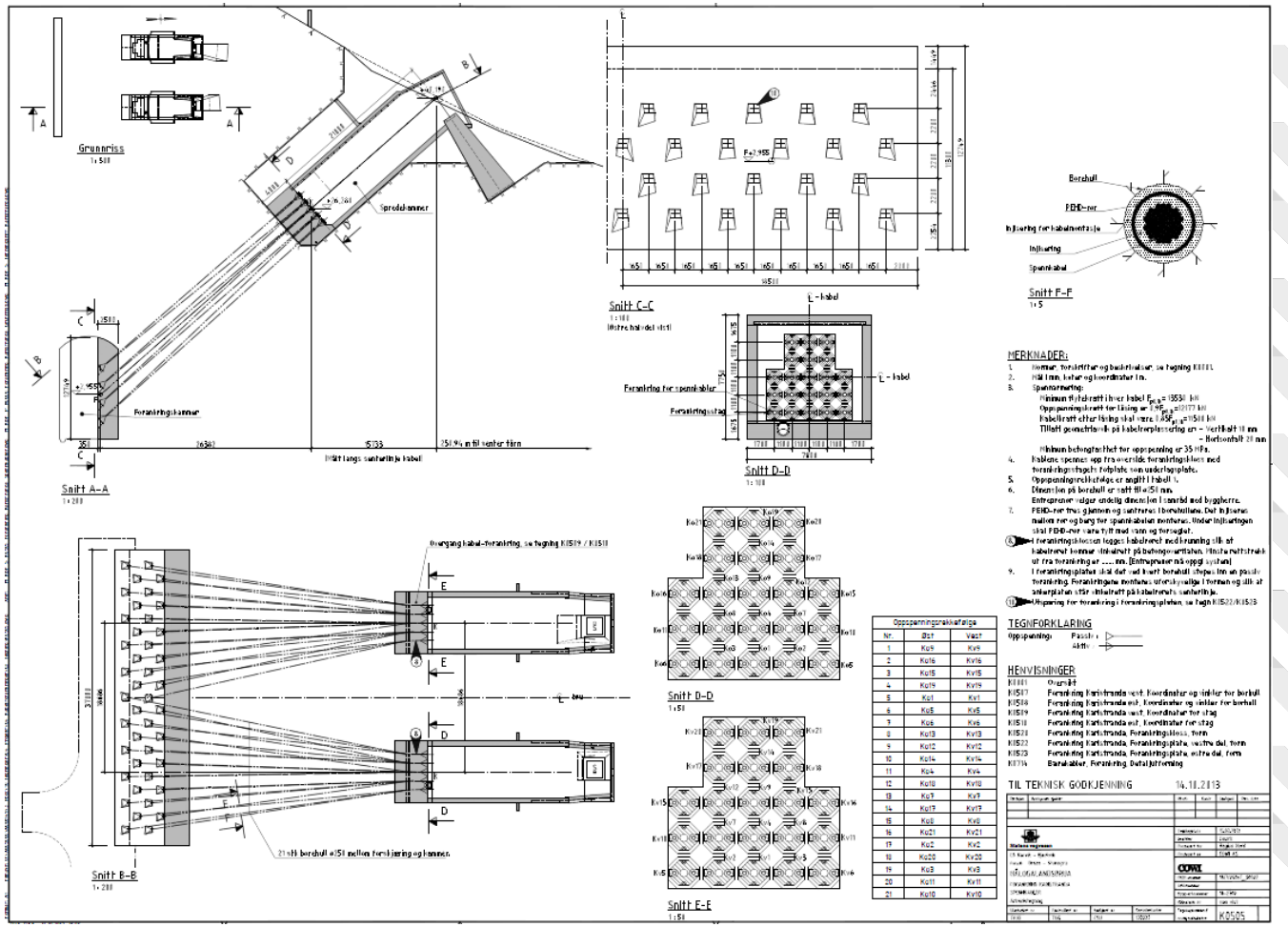

21 holes à 30 m from each splay chamber to anchoring chamber. Span cables through the holes.
1 extra cabel at Øyjord because of steep angle.

In addition 3 holes for drainage and one for el-cables.

Water pump in anchoring hall for drainage water.

E6 Hålogaland bridge

Statens vegvesen

Splay chamber Karistrand

E6 Hålogaland bridge

Statens vegvesen

Stairs in splay chamber at Øyjord

Statens vegvesen

Inner side of anchoring, anchoring chamber

Statens vegvesen

Strands for main cables, each about 1700 m long

E6 Hålogaland bridge

Statens vegvesen

Tower sadles and splay sadles

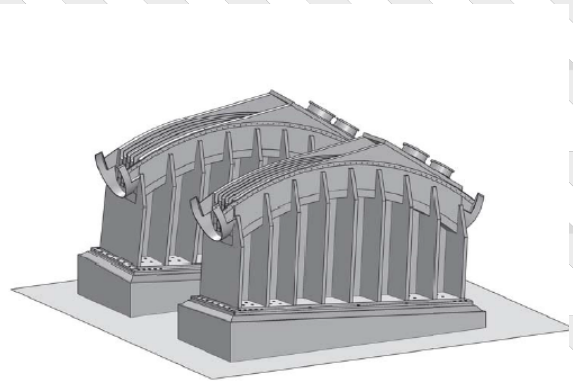

4 tower saddles ca.
23 tons each.

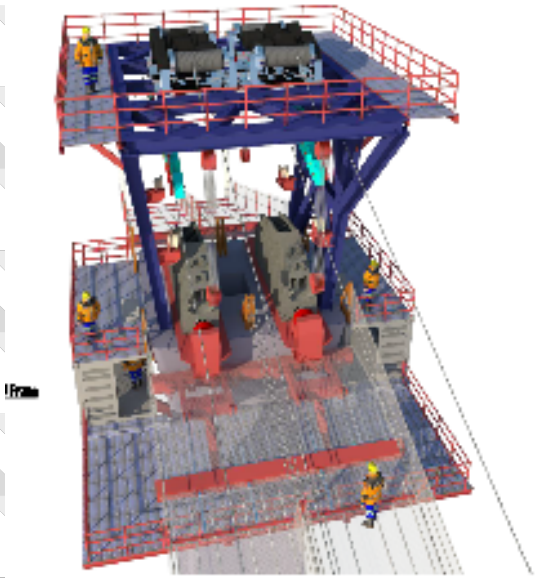

Lifting to tower top.
Moving 1,1 – 1,2 m back before cable buliding –jacking forwards after cabel buildinging.

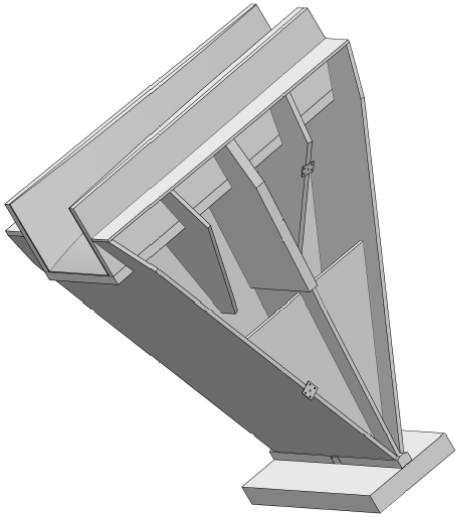

4 splay saddles ca. 13,5 tons each.

Statens vegvesen

E6 Hålogaland bridge

Karistrand – lifting tower saddle

E6 Hålogaland bridge

Statens vegvesen

Karistrand – lifting tower saddle

Statens vegvesen

E6 Hålogaland bridge

Karistrand – lifting tower saddle

E6 Hålogaland bridge

Statens vegvesen

Fundation tower saddle

E6 Hålogaland bridge

Statens vegvesen

Main cables

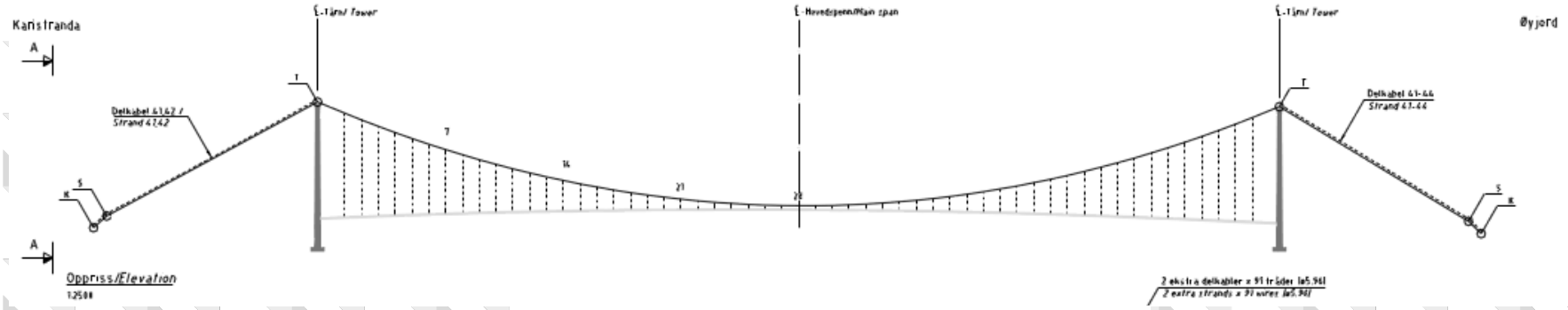

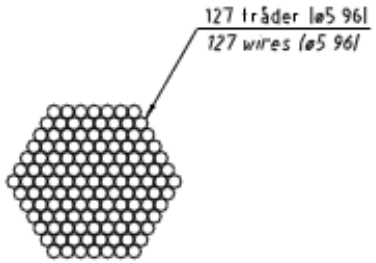

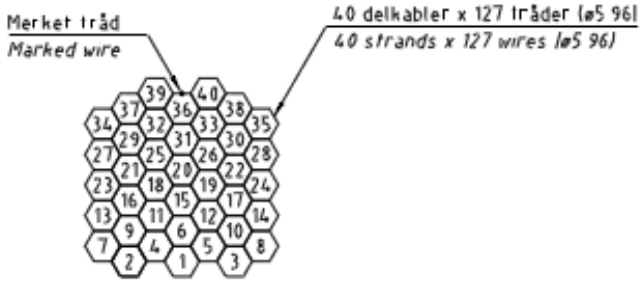

2 additional cables at Karistrand
4 additional cables at Øyjord

1 Strand contents
127 wires ø5,96 mm
18 300 km wires totally

40 strands in main span
Diameter = 0,475 m
Compacted to circular form

Because of steep angle

E6 Hålogaland bridge

Main cables – strands

Statens vegvesen

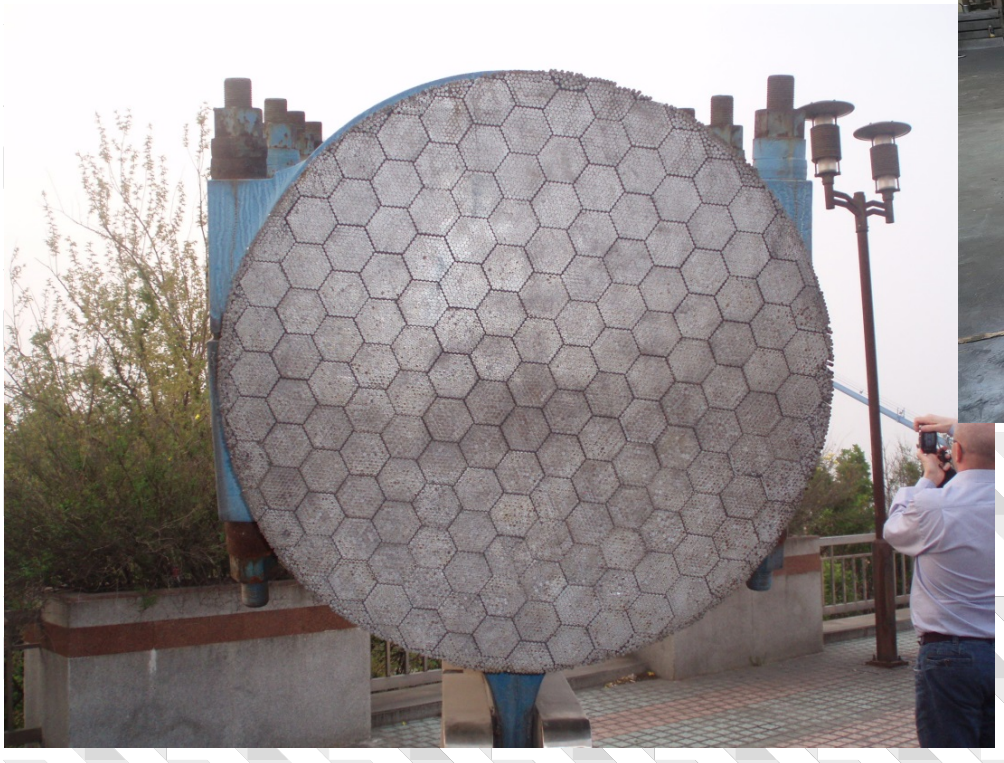

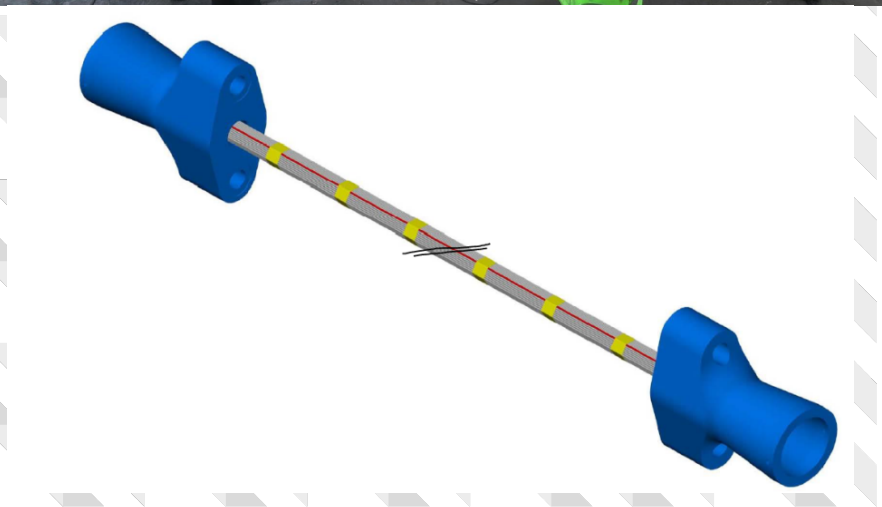

Main cable at Jiangyin bridge over Yangtze river near Shanghai.

E6 Hålogaland bridge

Hangers

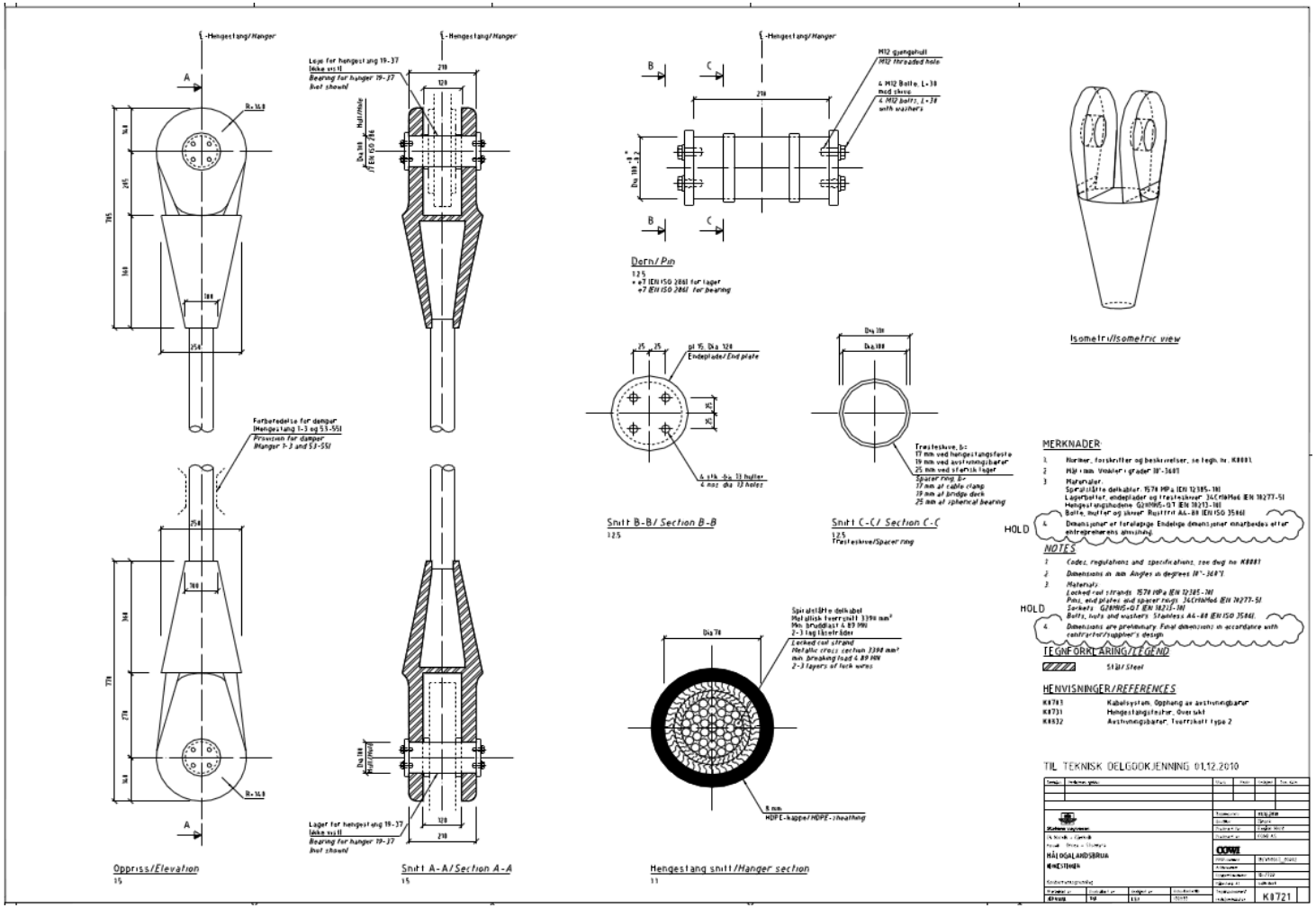

E6 Hålogaland bridge

Statens vegvesen

Catwalk

- Catwalk

Working platform for cables

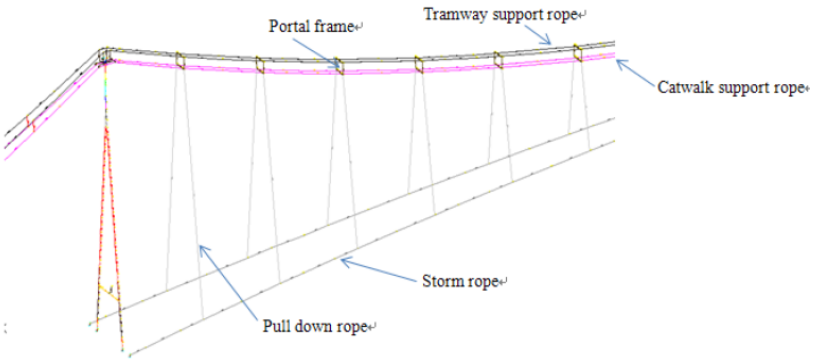

Figure 3.4 Diagram of the wind cable and the wind boom

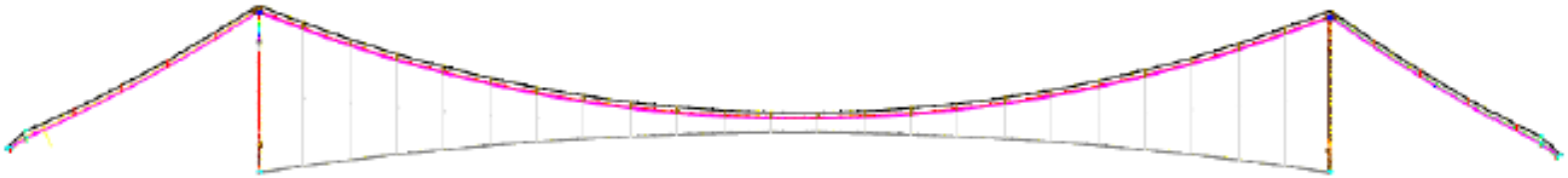

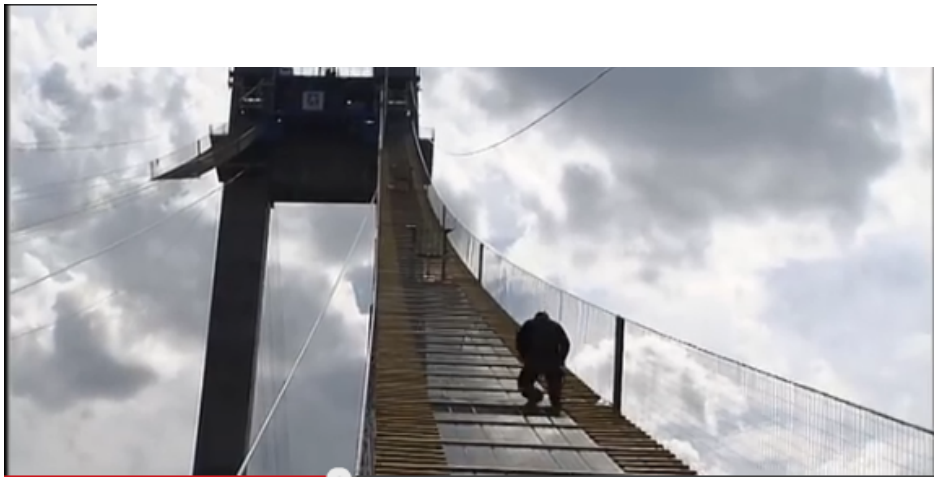

Ca. 300 tons equipment for etablishing of catwalk and cabel tracking brought to site before startup.

Statens vegvesen

Ende section steel connection to concrete

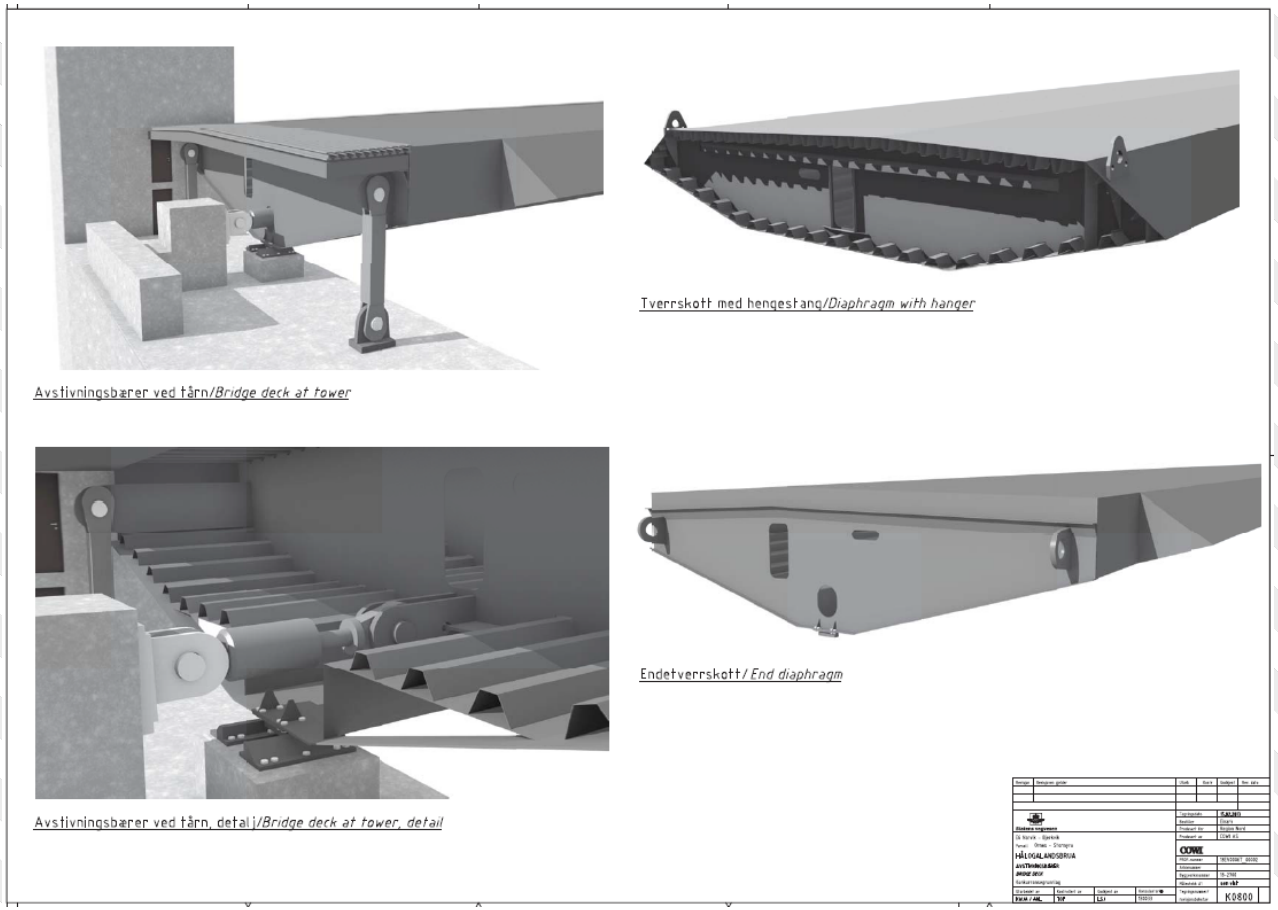

Stiffening girder, endpoint.

Steel: NS-EN 10025 S355N or M

30 seksjoner à 30 m
Building in China, transport by boat and lifting at site.

Totally app. 7500 tons of steel

Statens vegvesen

E6 Hålogaland bridge

Production sites in China

Beijing – Shanghai 1213 km

E6 Hålogaland bridge

Statens vegvesen

Morning meeting at production site Zhongshan

E6 Hålogaland bridge

Statens vegvesen

Bottom elements for box girder in jig

Statens vegvesen

E6 Hålogaland bridge

Mounting of diaphragm (inner walls)

E6 Hålogaland bridge

Diaphragms

Statens vegvesen

E6 Hålogaland bridge

Statens vegvesen

First section out from workshop

E6 Hålogaland bridge

Statens vegvesen

One section painted

E6 Hålogaland bridge

Wiew from tower Karistrand

Statens vegvesen

E6 Hålogaland bridge

Statens vegvesen

Rig towertop

E6 Hålogaland bridge

Statens vegvesen

Splay chamber

E6 Hålogaland bridge

Wires for catwalk

Statens vegvesen

E6 Hålogaland bridge

Statens vegvesen

Building of catwalk

E6 Hålogaland bridge

Catwalk elements

Statens vegvesen

Statens vegvesen

E6 Hålogaland bridge

Building of catwalk

E6 Hålogaland bridge

Statens vegvesen

Building of catwalk

E6 Hålogaland bridge

Statens vegvesen

Towertop rig

E6 Hålogaland bridge

Statens vegvesen

New and old E6, Ofotbanen and Narvik town

E6 Hålogaland bridge

Øyjord, tower, viaduct and Øyjord bridge

Statens vegvesen

E6 Hålogaland bridge

Statens vegvesen

Finish tower top